SEWERS FOR ADOPTION
6TH EDITION

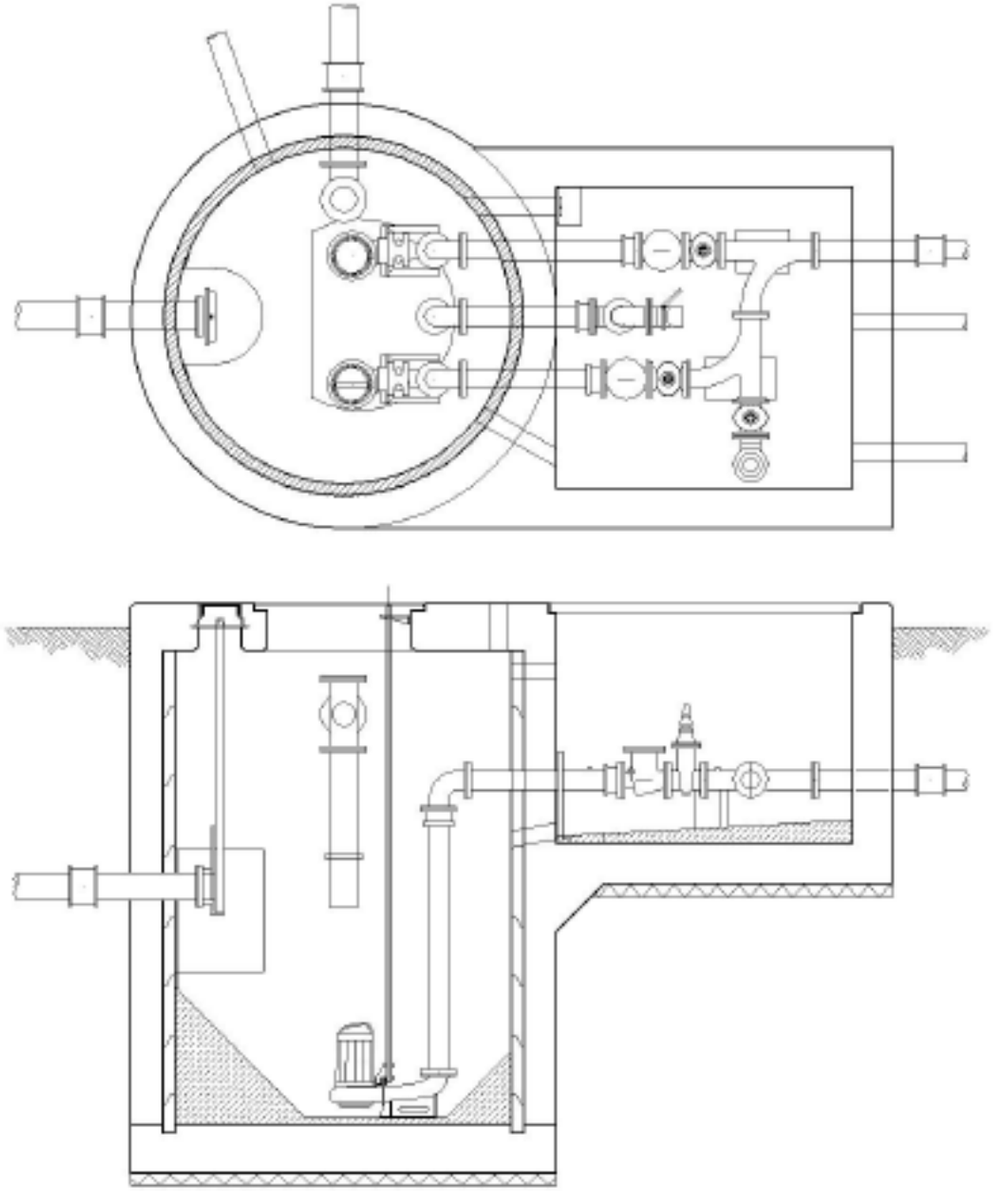

WESSEX WATER'S PUMPING STATION ADDENDUM

Wessex Water
a YTL company

FIRST ISSUE 1ST APRIL 2006

FOREWORD

The production of Sewers for Adoption 6th Edition identified that there are differences in the requirements of individual Sewerage Undertakers in relation to pumping stations. These differences are mainly due to variations in health and safety policies plus operating arrangements.

It was not be possible to reconcile these differences to enable inclusion in the 6th edition therefore each Sewerage Undertaker has prepared their own Pumping Station Addendum for inclusion on the WRc Sewers For Adoption website.

This Pumping Station Addendum is to be used in conjunction with the main Sewers for Adoption document when a pumping station is to form part of a Section 104 sewer adoption application, and reference will be made to the Addendum within the adoption agreement.

The clauses in this Addendum are intended to supplement those in the Sewers for Adoption 6th edition; however should there be a conflict the clause in this Addendum will take precedence.

Wessex Water has various standard detail drawings for pumping stations (Civil/M & E), as detailed on www.wessexwater.co.uk/developerservices Advice Note No. 5. Copies of the current revision of these drawings are available **FREE** to Developers on request from the Development Engineer.

There will be no need to reproduce the Standard Drawings as part of the adoption submission. Please note these drawings are required over those within the Sewers for Adoption 6th document for use in our area.

The above mentioned website also contains advice notes relating to:

- septicity control (Advice Note No. 2)
- jointing of PE pipes for use as pumping mains (Advice Note No. 6)
- Health and Safety items for inclusion in site safety and maintenance files for pumping stations (Advice Note No. 1)
- Wessex Water pumping station pre-maintenance inspection checklists (Advice Note No. 3)
- Telemetry Installation Application Form
- Framework Agreement Suppliers (Advice Note No. 13)
- Other items which the developer, his consultant and contractors may find of use when preparing a submission, constructing, supervising or checking pumping stations for adoption.

Contents

PART 1- GENERAL

1.5.2 PROCEDURE
1.5.3 PROCEDURE
1.6.1 INSPECTIONS
1.7.1(a) PROVISIONAL CERTIFICATE & MAINTENANCE PERIOD
1.7.1(c) PROVISIONAL CERTIFICATE & MAINTENANCE PERIOD
1.9.3 RECOVERY OF UNDERTAKER'S COSTS
1.11.1(a) STATUTORY CONSENTS & OTHER PERMISSIONS
1.11.1.(e) STATUTORY CONSENTS & OTHER PERMISSIONS
1.13.1 PUMPING STATIONS

PART 2- DESIGN

PART 2A SEWERS (RISING MAINS)

2.4.4 LAYOUT OF SEWERS, MANHOLES AND RISING MAINS
2.16.2 HYDRAULIC DESIGN – RISING MAINS
2.16.3(b) HYDRAULIC DESIGN – RISING MAINS
2.16.4 HYDRAULIC DESIGN – RISING MAINS

PART 2B PUMPING STATIONS

2.17.3 GENERAL DESIGN OF PUMPING STATIONS
2.17.7 GENERAL DESIGN OF PUMPING STATIONS
2.18.1(a) LAYOUT OF PUMPING STATIONS
2.18.2 LAYOUT OF PUMPING STATIONS
2.18.5 LAYOUT OF PUMPING STATIONS
2.19.1 EMERGENCY OVERFLOW
2.19.3 EMERGENCY OVERFLOW
2.20.1 WET WELL
2.20.2 WET WELL
2.21.1 VALVE CHAMBER
2.21.2 VALVE CHAMBER
2.22.2 ACCESS INTO WET WELLS AND CHAMBERS
2.22.3 ACCESS INTO WET WELLS AND CHAMBERS

PART 3 - M & E SPECIFICATION FOR SMALL PUMP STNS

PART 3A PUMP SPECIFICATION

3.1.4 INTRODUCTION
3.3.6.1 DESIGN REQUIREMENTS (Impellers)
3.3.13.1 DESIGN REQUIREMENTS (Lifting Systems)
3.3.15.1 DESIGN REQUIREMENTS (Davits and Davit Sockets)
3.3.15.2 DESIGN REQUIREMENTS (Davits and Davit Sockets)
3.3.16.4 DESIGN REQUIREMENTS (Chains)
3.4.1 PUMPSET PROTECTION SENSORS

PART 3C ELECTRICAL SPECIFICATION

3.10.1.1 GENERAL (General)
3.10.2.1 GENERAL (Labels and Safety Signs)
3.11.2.2 KIOSK (Kiosk Construction)

3.11.2.5 KIOSK (Kiosk Construction)
3.11.2.9 KIOSK (Kiosk Construction)
3.11.2.12 KIOSK (Kiosk Construction)
3.11.2.13(d) KIOSK (Kiosk Construction)
3.11.3.1 KIOSK (Kiosk Mounting Arrangements)
3.11.3.3 KIOSK (Kiosk Mounting Arrangements)
3.11.7.1 KIOSK (Telemetry Outstation)
3.12.1.4 THE CONTROL PANEL (General)
3.13.3.1 FUNCTIONAL UNITS (Motor Starter Compartments)
3.13.4.1 FUNCTIONAL UNITS (Common Control Components)
3.13.4.1(c) FUNCTIONAL UNITS (Common Control Components)
3.14.3.1 THE ELECTRICAL INSTALLATION (Installation of Cables)
3.14.3.2 THE ELECTRICAL INSTALLATION (Installation of Cables)

PART 3D VALVE SPECIFICATION

3.16.1 GATE (SLUICE) VALVES
3.17.1 CHECK (REFLUX) VALVES

PART 4 - M & E SPECIFICATION FOR MICRO PUMP STNS

PART 4A PUMP SPECIFICATION

4.1.4 INTRODUCTION
4.3.14.1 DESIGN REQUIREMENTS (Davits and Davit Sockets)
4.3.14.2 DESIGN REQUIREMENTS (Davits and Davit Sockets)
4.3.15.4 DESIGN REQUIREMENTS (Chains)
4.4.1 PUMPSET PROTECTION SENSORS

PART 4C ELECTRICAL SPECIFICATION

4.10.1.1 GENERAL (General)
4.10.2.1 GENERAL (Labels and Safety Signs)
4.11.2.2 KIOSK (Kiosk Construction)
4.11.2.5 KIOSK (Kiosk Construction)
4.11.2.9 KIOSK (Kiosk Construction)
4.11.2.11 KIOSK (Kiosk Construction)
4.11.2.12(c) KIOSK (Kiosk Construction)
4.11.3.1 KIOSK (Kiosk Mounting Arrangements)
4.11.3.3 KIOSK (Kiosk Mounting Arrangements)
4.11.6.1 KIOSK (Telemetry Outstation)
4.12.1.3 THE CONTROL PANEL (General)
4.13.4.1 PANEL LAYOUT (Common Control Equipment)
4.13.4.1(c) PANEL LAYOUT (Common Control Equipment)
4.14.3.1 THE ELECTRICAL INSTALLATION (Installation of Cables)
4.14.3.2 THE ELECTRICAL INSTALLATION (Installation of Cables)

PART 4D VALVE SPECIFICATION

4.16.1 GATE (SLUICE) VALVES
4.17.1 CHECK (REFLUX) VALVES

PART 5 CIVIL ENGINEERING SPECIFICATION

5.2.12.1 Table 5.3 MATERIALS (mortar)
5.2.42.1 MATERIALS (Access Covers for Pumping Stations)
5.7.10.2 CLEANSING & TESTING (Testing of PE Pressure Pipes)

PART 1 – GENERAL

Clause 1.5 – PROCEDURE

Clause 1.5.2

- The general Hazardous Zone Classification of a pumping station site in relation to wet wells and valve chambers serving a domestic development is Zone 1
- The classification for sites where industrial processes or trade discharges occur will be dependent on the type and contents of the discharges.
- The Developer shall confirm to Wessex Water full discharge details prior to commencing the pumping station design so that an appropriate assessment can be made and a Hazardous Zone Classification can be given based on the submitted information

Clause 1.5.3

- Wessex Water requires all the mandatory and supplementary information relating to pumping stations stated in Table 1.1 of Sewers for Adoption 6th edition.

Clause 1.6 – INSPECTIONS

Clause 1.6.1

- Wessex Water's own Term Contractors or Operational staff responsible for the future maintenance of the pumping station will also be involved with any inspection of the pumping station..
- Developers should note that any inspections by Wessex Water should not in any way be regarded as a substitution for the supervision to be undertaken by the Developer or his Contractor.
- The Developer may wish to use the Wessex Water's pre-maintenance inspection checklist (Advice Note No.3) to assist in the supervision of any pumping station contractors.

Clause 1.7 – PROVISIONAL CERTIFICATE AND MAINTENANCE PERIOD

Clause1.7.1 (a)

- The telemetry system, including a live BT line, must be installed and fully operational prior to commencement of the Maintenance Period. However we would recommend that the system is installed and commissioned as early as possible following the pumping station becoming operational.

Clause 1.7.1 (c)

- The Operating and Maintenance manuals are to be provided prior to commencement of the Maintenance Period and shall have, as a minimum, the contents as detailed in our Advice Note No. 1.

Clause 1.9 – RECOVERY OF UNDERTAKER'S COSTS

Clause 1.9.3

- The Developer will need to make an allowance of £3,000 for the provision, installation and commissioning of the Wessex Water specified telemetry system.
- Where the Developer provides the telemetry outstation Wessex Water will undertake the linking (excluding provision of live BT line) of the new outstation to the Wessex Water system on a rechargeable basis. (Please use the application form on our website).
- Once the telemetry system is operational Wessex Water are able to provide a callout service to notify the Developer's nominated contact or contractor of any alarm situations to aid a quicker response to rectify any problems.

- Should the Developer or his contractor carryout any works to the pumping station once telemetry has been installed he shall contact the Wessex Water Control Room to prevent unnecessary callouts due to alarms operating. Failure to do so may result in Wessex Water charging him for any costs incurred. It is suggested that a temporary sign is fitted to the kiosk as a reminder to contact our control room.
- Wessex Water has a common security system utilising special Abloy padlocks at pumping station sites. These will be provided and fitted at the time of vesting by Wessex Water staff and the cost of the locks and their installation will be recharged to the Developer.

Clause 1.11 – STATUTORY CONSENTS AND OTHER PERMISSIONS

Clause 1.11.1 (a)

- The Developer shall take all reasonable remedial measures to return the pumping station to normal operation, as soon as practicable after receipt of warning of failure or breakdown of the pumping station.

Clause 1.11.1 (e)

- The pumping station layout and boundary treatment may be dictated by the planning conditions. Wessex Water MUST be consulted prior to making the planning application to confirm the acceptability of location, site layout and potential boundary treatment.
- Where a permanent fixed lifting system is being proposed the developer should be aware that **Planning Permission** is likely to be required.

Clause 1.13 – PUMPING STATIONS

Clause 1.13.1

- Refer to Wessex Water's Advice Note No. 1, which gives advice relating to prevention and treatment in relation to septicity control measures at pumping stations

Part 2 – DESIGN

PART 2A – SEWERS (RISING MAINS)

Clause 2.4 – LAYOUT OF SEWERS, MANHOLES AND RISING MAINS

Clause 2.4.4

- The minimum distance between structures and rising mains will be dependent on the pipe size, depth, operating pressure and thrust support systems. However the distance will not be any less than three metres.
- To ensure that the break manhole does not suffer from corrosion due to septicity Wessex Water requires the manhole to be given epoxy or polyurethane coating as below:

	SUPPLIER		TOP COAT	PRIMER
1	CORROCOAT	2 COAT 500µm	CORROTHANE XT	POLYGLASS PPA
2	SIKA	3 COAT 500µm	SIKAGARD 63N	SIKAGARD 720 EPOCEM
3	COPON	2 COAT 500µm	COPON 175	HYCOTE 630

ALL CONCRETE TO BE BLASTED CLEAN FOR KEY.

SOLVENT FREE EPOXY RESINS & POLYURETHANES TO BE BRUSH APPLIED IN VENTILATED AREAS.

COATING MAY BE APPLIED TO PCC RINGS BEFORE INSTALLATION.

Clause 2.16 – HYDRAULIC DESIGN – RISING MAINS

Clause 2.16.2

- The roughness values (Ks) used for the design of the rising main and pump selection shown in the calculations submitted shall allow for the “as new” condition and the rougher condition likely at the design horizon. Refer to HR Wallingford Report SR641. Typical roughness values depending on pipe type and conditions are likely to be between 0.15mm and 3.0mm, at the design horizon.

Clause 2.16.3 (b)

- Surge pressures in rising mains are sometimes excessive but can be reduced by careful design. The use of surge vessels and special starting methods should be considered, but will need to be agreed with the Development Engineer at an early stage, prior to a full submission.

Clause 2.16.4

- A flexible mechanical joint must be provided just prior to the discharge chamber for pressure testing of the main.

PART 2B – PUMPING STATIONS

CLAUSE 2.17 – GENERAL DESIGN OF PUMPING STATIONS

Clause 2.17.3

- The pumping station must be fully automated with provision for remote monitoring by the Wessex Water specified telemetry system.

Clause 2.17.7

- Where there is any risk of pollution to a watercourse the amount of storage required will be increased from the minimum level in Sewers for Adoption 6th edition. The amount of additional storage will need to be agreed on a site by site basis and in consultation with Wessex Water's Environmental Section, via the Development Engineer.
- Wessex Water is willing to accept over sizing of the manhole immediately upstream of the pumping station to assist in the provision of any required additional emergency storage.

Clause 2.18 – LAYOUT OF PUMPING STATIONS

Clause 2.18.1 (a)

- For populations of 2,500 and above, or for certain industrial/commercial developments, Wessex Water may require a dual power supply to the pumping station from a separate power supply source. The need for such a system to be confirmed with the Development Engineer at an early stage of the design.
- The separate power source can include a permanently wired in standby generator. In such cases appropriate soundproofing, fuel system and bunding and site security will be needed.
- A dual supply will be a standard requirement in all cases where the use of a portable generator is not suitable or possible.

Clause 2.18.2

- The compound area for a "Micro" pumping station shall be completely hard surfaced with no gravel, grassed, "grass-crete" or similar areas, and any such areas shall be minimised on small pumping station sites.
- The surface treatment of all pumping station sites need to be such that a positive drainage route to the wet well exists in case of any tanker spillage.

Clause 2.18.5

- Wessex Water has a standard drawing (Advice Note No.5) giving typical acceptable layouts for pumping stations in various situations
- Wessex Water is willing to consider open plan pumping station sites which incorporate measures to prevent deliberate or accidental vehicle entry of the site. Such sites shall also be vandal proof and must ensure health and safety risks to the public and Wessex Water staff is removed, especially in relation to undertaking any maintenance work.
- The use of brick walls for boundaries is acceptable but not preferred
- The use of park style fencing of the appropriate height or timber fencing with a hedge will also be considered as possible boundary treatments depending on location and the level of security required.
- Where chemical dosing or higher security is required, contact the Development Engineer to agree the appropriate fencing requirement prior to making a planning application.

Clause 2.19 – EMERGENCY OVERFLOW

Clause 2.19.1

- Wessex Water do not favour the installation of emergency overflows, preferring the alternative of storage and telemetry warning systems

Clause 2.19.3

- Wherever an emergency overflow is proposed**, Wessex Water must be consulted on the potential terms and conditions of the Consent to Discharge from the Environment Agency, before a formal application is made.**
- Where a consented emergency overflow is installed the telemetry system shall provide notification in the event of the overflow operating.
- Prior to adoption the Developer will provide to the Environment Agency, a written report on every operation of the emergency overflow, a copy of that report must also be given to Wessex Water.

Clause 2.20 – WET WELL

Clause 2.20.1

- The minimum internal dimension on a "**Micro**" pumping station wet well shall be 1500mm. This dimension should ensure that the pumps can be accommodated and the ultrasonic foot print will not interfere with the pipework.
- The wet well diameter shall not be overly large as this will result in the need for excessive amounts of benching.
- As with the small pumping station, the preferred form of construction for "**Micro**" pumping stations is pre-cast concrete chamber rings with concrete surround, together with a separate valve chamber, which may or may not be attached to the wet well.
- For "**Micro**" pumping stations a pre-formed concrete base (incorporating benching) may be used, (e.g. Flygt Topps). However it is essential that, whatever system is employed, that adequate benching is provided in the wet well to eliminate "dead zones". The slope of the benching shall not be flatter than 60 degrees to the horizontal.
- For "**Micro**" pumping stations GRP,HDPE or Polypropylene tubs (also referred to by manufacturers as bins) may be used to form the wet well in appropriate circumstances. Although such systems are less prone to infiltration, Wessex Water still requires that they are surrounded in concrete to ensure that they do not bulge or float, as a result of installation issues. It is essential that the full surround is provided so that the surface loadings are transmitted to the formation via the concrete surround rather than the tub. Also the wet well pipework is rigidly supported through the tub into the concrete.

Clause 2.20.2

- Where the initial foul sewage flow is likely to be well below the ultimate design flow, septicity may occur at the pumping station, or at the discharge manhole, where long rising mains are required. It is important to avoid this problem by careful sump design and/or by provision of chemical dosing facilities. Such facilities shall be approved by Wessex Water at the design stage.
- Where the combined retention time of sewage (at DWF) in the Rising Main and Wet Well is greater than six hours the developer may be required to provide a septicity control system.
- Sump design and level settings should give a floor profile and capacity that reduces grit deposition and limits pump starts to no greater than ten per hour. Flat floor areas must be kept to a minimum.
- It is preferred that the wet well diameter is not increased below the emergency stop level to form any required storage provision. Any such storage should be provided in specifically designed adjacent structures. These will need to be designed to be self-cleansing.
- Wessex Water requires a penstock on all incoming sewers to the wet well for "small" pumping station, but not on "micro" pumping stations.
- For "**Micro**" pumping stations the baffle plate will not be required on incoming sewers where it can be demonstrated that the incoming flows will not allow debris to land on pumps or pass through (or

otherwise disturb) the ultra sonic beam. As a guide a baffle plate should be provided where the inlet pipe gradient is steeper than 1 in 150.

- For "**Micro**" pumping stations where the wet well is less than four metres deep the tanker suction pipework may be omitted.

Clause 2.21 – VALVE CHAMBER

Clause 2.21.1

- The valve chamber must be separate from the wet well, but may or may not be structurally attached to it.
- If the excavation for the wet well causes disturbance to the ground beyond the immediate footprint of the wet well, then flexible couplings must be used in the pipework between the wet well and valve chamber to provide articulation in the event of settlement
- If the valve chamber is to be cantilevered off the concrete surround to the wet well, the valve chamber base shall be taken down to undisturbed ground, or the level built up with well compacted granular sub base material or foam concrete, to minimise the risk of any future differential settlement or the potential for the installation to tilt.

Clause 2.21.2

- Refer to Wessex Water standard drawings (Advice Note No. 5) for required contents of valve chamber
- For "**Micro**" pumping stations Wessex Water will not require fixed over pumping pipework.
- The size of the valve chamber will depend on the diameter of the pipework, together with required space for maintenance and removal.

Clause 2.22 – ACCESS INTO WET WELL AND CHAMBERS

Clause 2.22.2

- Openings are not to be smaller than the minimum clear opening for personnel access (675mm x 675mm), except where specifically required for instrumentation, valve spindles, or sampling purposes only.
- The openings to be positioned directly over any equipment.

Clause 2.22.3

- As with other pumping station items Wessex Water has a framework supplier for covers and frames for use in pumping station applications
- All cover plates to be edged and/or braced to ensure no buckling takes place in service.
- Covers are to be designed to cover the area in the minimum number of units. Panels to be equally sized to provide interchangability. Bolts or set-screws shall be a minimum 8mm diameter.
- All covers are to be set in a frame of the same material, such that the cover and frame are finished flush with the cover slab, unless an upstand frame is specifically required.
- Frames for hinged covers to be bolted to the concrete roof slab or supporting steelwork as appropriate.
- All frames are to be free-draining of surface water into the sump.
- Covers are to be lockable by means of a Wessex Water (Abloy) short-shank padlock to BS EN 123200 – Grade 3. The locking mechanism, with padlock in place, must not be a trip hazard.
- The recessed lock housing is to free drain surface water so that the padlock is not immersed. Special locking keys are not acceptable.
- All covers are to be operable by one person without the need for specialist lifting equipment.
- All 'slide-out' and 'lift-out' covers shall have enclosed keyholes and be supplied with a set of matching standard-sized keys. All hinged covers shall open without requiring separate lifting keys or tools.
- Where covers are retrofitted and it is not practicable to set flush with the cover slab, an upstand shall be provided of 100mm minimum to avoid being a trip hazard. In this instance, the loading on the cover in a closed position may be reduced to 1.5kN/m^2 distributed load, or 250kg over a central point of

$0.2m^2$. These covers shall comply in all other respects to the rest of the required specification for use on wet wells.

- In a 'CLOSED' position, the cover shall withstand a 5 tonne slow moving (<20mph) wheel load in accordance with FACTA (Fabrication Access Covers Trade Association) class B loading, or conform to BS EN 124 Class B125, unless specific site location dictates a class D400 cover.
- A secure eye-bolt anchorage shall be provided adjacent to the covers for attachment of personnel safety harness lines for fall protection. The location shall be selected to avoid being a trip hazard.
- Single or multiple covers and frames, up to triple covers of 2100mm x 1500mm clear opening, are acceptable to the wet well
- Covers to the wet well shall be hinged, and each cover shall have torsion-spring assistance to ensure a lifting effort not exceeding 25kgf for one-man operation, and to guard against 'slamming' upon closing. Each hinged cover shall open beyond 90° and have an automatic locking device to secure the cover in the 'OPEN' position. The cover hinge shall be opposite the lifting davit socket to ensure a clear slew of the davit.
- Where it is impracticable and unsafe to install hinged covers, then the "slide-out" type of cover is preferred to the "lift-out" type. The weight of any individual cover shall not exceed 25kg.
- Where multiple covers are used, overlaps between covers are non-preferred, but when necessary then the sequence of opening shall be determined by the operating procedures, with the cover above any mechanical plant being the first cover to be opened. Each cover shall be lockable as described above
- The cover shall include integral fall protection suitable for maintenance procedures working with davit slews and shear legs.
- A hinged safety grid capable of withstanding a 250kg load shall be provided below the opening cover where any visual inspection, washdown, or removal of equipment will be necessary, or where there is a fall >2m.
- The safety grid should be in 2 hinged sections, to allow a pump to be withdrawn and for the safety grid to automatically close as the pump clears the grid.
- Closure of the safety grid or cover shall be possible with the pump, or any other motor drive, at a minimum height above the frame to provide a safe working platform for maintenance in accordance with LOLER Regulations.
- Where over-pumping pipework is not installed, covers and safety grids shall allow for a 100mm diameter flexible pipe to be fed into the sump through a specific access point, without exposing the operator to an unprotected fall situation. Where over-pumping pipework is installed, a specific access point shall be provided to connect a flexible hose to the Bauer coupler.
- A lifting chain and cable entry facility, minimum 40mm square, shall be provided to enable the safety grid(s) and cover(s) to be closed whilst the pump, or any other motor drive, is removed for inspection without disconnecting the chain or cable.
- Any instrumentation, valve spindle or similar, below or within the cover, shall have an independent, hinged access facility such that it is maintainable without lifting the main covers.
- Dry Wells to have at least one cover shall which be removable for man-access, and shall preferably be hinged, complete with torsion-spring assistance to ensure a lifting effort not exceeding 25kgf for one-man operation, and to guard against 'slamming' upon closing. Any hinged cover shall open beyond 90° and have an automatic locking device to secure the cover in the 'OPEN' position.
- Fall protection of hinged safety grids shall be provided under removable covers to dry well chambers where there is a risk of injury from falling onto mechanical plant, or where the depth is >2m.
- Any mechanical plant shall have an opening cover located directly above it. Any 'lift-out' sectional covers shall incorporate lifting points. All sectional covers shall be individually locked to ensure integrity when one section is removed. Any intermediate supporting beams shall be removable when necessary so as not to impede routine maintenance access to any equipment. If removable, then a safe system of removal must be incorporated into the design. Individual items of plants such as pumps and motor drives shall be capable of being removed with the supporting beams still in place. Individual covers within the multiple units that do not require lifting on a regular basis shall be securely fixed to the frame.

PART 3 - M & E SPECIFICATION FOR SMALL PUMP STNS

PART 3A PUMP SPECIFICATION

Clause 3.1 - INTRODUCTION

Clause 3.1.4

- Wessex Water has a Framework Agreement for the supply of submersible sewage pumps, therefore these are the preferred pump types.
- In cases where the pump duty does not appear obtainable from a Framework Agreement supplier submersible sewage pump complying with Sewers for Adoption 6th edition and this Addendum, Wessex Water must be consulted to agree either:
  A) A reduction in the required pump generated head by re-routing the rising main.
  B) The use of a Framework Agreement Pump that does not comply with specified clauses of Sewers for Adoption 6th edition and this Addendum.

Clause 3.3– DESIGN REQUIREMENTS

Impellers - Clause 3.3.6.1

- If the development is large and will take a number of years to complete then the developer is recommended to installing the largest pumps with the smallest impellers and then changing the impellers as the flow to the pumping station increases

Lifting Systems – Clause 3.3.13.1

- Where "A" frame gantry is used then the maximum weight lifting limit (WLL) is one tonne
- Where a gantry is provided a travelling hoist shall also be provided, where use is infrequent it can be of the non powered type, but must be protected from the weather by a metal cover
- If the pump weight is greater than 250kg, then Wessex Water is to be consulted over the lifting equipment to be provided.

Davits and Davit Sockets – Clause 3.3.15.1

- Each davit socket shall be cast into the concrete to allow a davit of 1m radius to be used, but shall be tested on site on the assumption that a davit of 1.3m radius might be inadvertently used in the socket.

Davits and Davit Sockets – Clause 3.3.15.2

- Maximum WLL for davit use is 0.5 tonne at one metre radius
- Maximum lift when using a davit shall not be greater than six metres.
- If the pump weight is less than 250kg, then Wessex Water requires a 500kg WLL rated davit socket only (no davit) to be installed.

Chains – Clause 3.3.16.4

- Each submersible pump shall be lifted by a stainless steel chain, which is also to remain attached to the pumpset during operation

Clause 3.4 – PUMPSET PROTECTION SENSORS

Clause 3.4.1

- For pump sets rated less than 15kW, Wessex Water requires only option 3.4.1 (a)

PART 3C ELECTRICAL SPECIFICATION

Clause 3.10 – GENERAL

General – Clause 3.10.1.1

- The Developer shall ensure that power supply is on a Day / Night metering (Economy 7) tariff for any sewage pumping station offered for adoption.
- During the Maintenance Period, the Developer shall supply the following information to Wessex Water:

  - Current owner of pumping station and address
  - Current operating sub contractor and address
  - Electricity Supplier
  - Electricity Distribution Company
  - Site reference number
  - Core Meter Point Administration Number (MPAN)
  - Size of Supply (KVA Connection Capacity)
  - Annual Consumption (kWh)
  - Half Hourly Metering: Fitted / Not fitted
  - Meter Number
  - Anticipated date of transfer
  - Copy of a recent meter bill

- On completion of the Maintenance Period the Developer shall write to the power supplier with a copy to Wessex Water, advising of site and supply transfer.
- Formal vesting of the pumping station will not be carried out until the supply has been transferred.
- If Wessex Water wishes to change supplier, they will contact the new supplier in writing and advice them of the date from which the new supply terms would apply to the adopted pumping station. If the supply is to remain with the original supplier, Wessex Water will confirm in writing to the existing supplier no later than one week before the vesting date.

Labels and Safety Signs – Clause 3.10.2.1

- Wessex Water requires all labels to be fitted by means of stainless steel self-tapping screws.

Clause 3.11 – KIOSK

Kiosk Construction – Clause 3.11.2.2

- All panels used in the construction shall be jointed using stainless steel bolts and sealed with a non-biodegradable mastic sealer.

Kiosk Construction – Clause 3.11.2.5

- The internal flange of the kiosk base shall be suitable for bolting to a 50mm rebate in the concrete base slab

Kiosk Construction – Clause 3.11.2.9

- Wessex Water’s standard colour is 14C39 to BS 4800, although other colours and textures will be considered to allow the kiosk to blend with the surroundings, should any planning conditions require such a need.

Kiosk Construction – Clause 3.11.2.12

- The kiosk shall be fitted with a heavy-duty stainless steel hasp and staple three point locking system suitable for an Abloy padlock. **Rim locks are not acceptable.**

Kiosk Construction – Clause 3.11.2.13 (d)

- A complete set of drawings shall be stored in the kiosk in a weatherproof envelope.

Kiosk Mounting Arrangements Clause - 3.11.3.1

- Wessex Water's standard drawings show the required mounting arrangement, including vented based
- The rebate shall be filled with concrete on completion of the kiosk installation.

Kiosk Mounting Arrangements Clause - 3.11.3.3

- Fixing bolts shall be stainless steel expanding bolt type complete with large washers to prevent damage to the GRP flange. They shall be located at suitable intervals to prevent flange distortion.

Telemetry Outstation – Clause 3.11.7.1

- Wessex Water's telemetry system requires the installation of a Seprol S250 or S500 outstation on the site.
- Contact: Seprol (01246 436331) or for systems contact: Servelec (01246 433981).
- A BT line must be provided and made live to the electrical kiosk to connect up the telemetry outstation.
- Wessex Water require the following states to be monitored as a minimum for a two pump pumping station:

Signal		**On Site**	**Status**	**Alarm**
1.	PLC Failure	✓		✓
2.	Mains Supply Failure		✓	✓
3.	NRV Failure (not used)			
4.	Wet Well High		✓	✓
5.	Pump One Run	✓		
6.	Pump One Failed		✓	✓
7.	Pump Two Run	✓		
8.	Pump Two Failed		✓	✓
9.	+ Analogue 4-20 mA – Well Level			✓
10.	Overflow Discharging	✓	✓	✓

Telemetry System Signals

1.	Battery Low	✓		✓
2.	Outstation Power Failure			
3.	Telemetry Fail	✓		✓
4.	Loss of Echo	✓		✓

An intrinsically safe barrier (IS barrier) is required for float switches.

A mains power supply in the telemetry section of the MCC is required (a fused spur unit would be acceptable).

Clause 3.12 - THE CONTROL PANEL

General – Clause 3.12.1.4

- When each pump set is rated less than 7.5 kW the panel may be to Form 2

Clause 3.13 - FUNCTIONAL UNITS

Motor Starter Compartments – Clause 3.13.3.1

- An individual 110 V AC control transformer shall be provided in each starter compartment.

Common Control Components – Clause 3.13.4.1

- Overflow discharging float switch (where a consented overflow is provided)

Common Control Components – Clause 3.13.4.1 (c)

- Level control shall be by means of an ultra sonic system.
- There is no limit on depth of the wet well required to accept deep sewer connections. However, overly deep wet wells result in the ultrasonic foot print interfering with the pipework. Under such situations Wessex Water will consider the use of a pressure bell instead of ultra sonics at depths greater than five metres.

Clause 3.14 – THE ELECTRICAL INSTALLATION

Installation of Cables – Clause 3.14.3.1

- Float switch support brackets shall be stainless steel

Installation of Cables – Clause 3.14.3.2

- No connection boxes are to be situated in the wet well for pumps or controls

PART 3D VALVE SPECIFICATION

Clause 3.16 – GATE (SLUICE) VALVE

Clause 3.16.1

- Wessex Water prefer the use of ductile iron valves to BS EN 1074 Part 2

Clause 3.17 – CHECK (REFLUX) VALVES

Clause 3.17.1

- Wessex Water prefer the use of ductile iron valves to BS EN 1074 Part 3
- One end of the reflux valve shall be fitted using a tied flange adaptor to allow its removal if it is required to be maintained or replaced

PART 4 - M & E SPECIFICATION FOR MICRO PUMP STNS

PART 4A PUMP SPECIFICATION

Clause 4.1 - INTRODUCTION

Clause 4.1.4

- Wessex Water has a Framework Agreement for the supply of submersible sewage pumps, therefore these are the preferred pump types.
- In cases where the pump duty does not appear obtainable from a Framework Agreement pump complying with Sewers for Adoption 6th edition and operating at not more than 1500rpm, Wessex Water must be consulted to agree either:
  A) A reduction in the required pump generated head by re-routing the rising main.
  B) The use of a Framework Agreement Pump that operates at greater than 1500rpm
- Each pumpset shall be fitted with its own flushing valve, to ensure that the contents of the wet well are kept well agitated, oxygenated and cleaner.
- Where flushing valves can not be fitted to the proposed pumps a system of flow return must be installed capable of operation and control by the plc.

Clause 4.3 – DESIGN REQUIREMENTS

Davits and Davit Sockets – Clause 4.3.14.1

- Each davit socket shall be cast into the concrete to allow a davit of 1m radius to be used, but shall be tested on site on the assumption that a davit of 1.3m radius might be inadvertently used in the socket.

Davits and Davit Sockets – Clause 4.3.14.2

- When the pump weight is less than 250kg, then Wessex Water requires a 500kg weight lift limit (WLL) rated davit socket only (no davit) to be installed.

Chains – Clause 4.3.15.4

- Each submersible pump shall be lifted by a stainless steel chain, which is also to remain attached to the pumpset during operation

Clause 4.4 – PUMPSET PROTECTION SENSORS

Clause 4.4.1

- For pump sets rated less than 15kW, Wessex Water requires only option 3.4.1 (a)

PART 4C ELECTRICAL SPECIFICATION

Clause 4.10 – GENERAL

General – Clause 4.10.1.1

- The Developer shall ensure that power supply is on a Day / Night metering (Economy 7) tariff for any sewage pumping station offered for adoption.
- During the Maintenance Period, the Developer shall supply the following information to Wessex Water:

  - Current owner of pumping station and address
  - Current operating sub contractor and address
  - Electricity Supplier
  - Electricity Distribution Company
  - Site reference number
  - Core Meter Point Administration Number (MPAN)
  - Size of Supply (KVA Connection Capacity)
  - Annual Consumption (kWh)
  - Half Hourly Metering: Fitted / Not fitted
  - Meter Number
  - Anticipated date of transfer
  - Copy of a recent meter bill

- On completion of the Maintenance Period the Developer shall write to the power supplier with a copy to Wessex Water, advising of site and supply transfer.
- Formal vesting of the pumping station will not be carried out until the supply has been transferred.
- If Wessex Water wishes to change supplier, they will contact the new supplier in writing and advice them of the date from which the new supply terms would apply to the adopted pumping station. If the supply is to remain with the original supplier, Wessex Water will confirm in writing to the existing supplier no later than one week before the vesting date.

Labels and Safety Signs – Clause 4.10.2.1

- Wessex Water requires all labels to be fitted by means of stainless steel self-tapping screws.

Clause 4.11 – KIOSK

Kiosk Construction – Clause 4.11.2.2

- All panels used in the construction shall be jointed using stainless steel bolts and sealed with a non-biodegradable mastic sealer.

Kiosk Construction – Clause 4.11.2.5

- The internal flange of the kiosk base shall be suitable for bolting to a 50mm rebate in the concrete base slab

Kiosk Construction – Clause 4.11.2.9

- Wessex Water’s standard colour is 14C39 to BS 4800, although other colours and textures will be considered to allow the kiosk to blend with the surroundings, should there be a planning condition requiring such a need.

Kiosk Construction – Clause 4.11.2.11

- The kiosk shall be fitted with a heavy-duty stainless steel hasp and staple three point locking system suitable for an Abloy padlock. **Rim locks are not acceptable.**

Kiosk Construction – Clause 4.11.2.12 (c)

- A complete set of drawings shall be stored in the kiosk in a weatherproof envelope.

Kiosk Mounting Arrangements Clause - 4.11.3.1

- Wessex Water's standard drawings show the required mounting arrangement, including vented based
- The rebate shall be filled with concrete on completion of the kiosk installation.

Kiosk Mounting Arrangements Clause - 4.11.3.3

- Fixing bolts shall be stainless steel expanding bolt type complete with large washers to prevent damage to the GRP flange. They shall be located at suitable intervals to prevent flange distortion.

Telemetry Outstation – Clause 4.11.6.1

- Wessex Water's telemetry system requires the installation of a Seprol S250 or S500 outstation on the site.
- Contact: Seprol (01246 436331) or for systems contact: Servelec (01246 433981).
- A BT line must be provided and made live to the electrical kiosk to connect up the telemetry outstation.
- Wessex Water require the following states to be monitored as a minimum for a two pump pumping station:

Signal		On Site	Status	Alarm
1.	PLC Failure	✓		✓
2.	Mains Supply Failure		✓	✓
3.	NRV Failure (not used)			
4.	Wet Well High		✓	✓
5.	Pump One Run	✓		
6.	Pump One Failed		✓	✓
7.	Pump Two Run	✓		
8.	Pump Two Failed		✓	✓
9.	+ Analogue 4-20 mA – Well Level			✓
10.	Overflow Discharging	✓	✓	✓
Telemetry System Signals				
1.	Battery Low	✓		✓
2.	Outstation Power Failure			
3.	Telemetry Fail	✓		✓
4.	Loss of Echo	✓		✓

- An intrinsically safe barrier (IS barrier) is required for float switches.
- A mains power supply in the telemetry section of the MCC is required (a fused spur unit would be acceptable).

Clause 4.12 – THE CONTROL PANEL

General – Clause 4.12.1.3

- An individual 110 V AC control transformer shall be provided in each starter compartment.

Clause 4.13 – PANEL LAYOUT

Common Control Components – Clause 4.13.4.1

- Overflow discharging float switch (where a consented overflow is provided)

Common Control Components – Clause 4.13.4.1 (c)

- Level control shall be by means of an ultra sonic system.

Clause 4.14 – THE ELECTRICAL INSTALLATION

Installation of Cables – Clause 4.14.3.1

- Float switch support brackets shall be stainless steel

Installation of Cables – Clause 4.14.3.2

- No connection boxes are to be situated in the wet well for pumps or controls

PART 4D VALVE SPECIFICATION

Clause 4.16 – GATE (SLUICE) VALVE

Clause 4.16.1

- Wessex Water prefer the use of ductile iron valves to BS EN 1074 Part 2

Clause 4.17 – CHECK (REFLUX) VALVES

Clause 4.17.1

- Wessex Water prefer the use of ductile iron valves to BS EN 1074 Part 3
- One end of the reflux valve shall be fitted using a tied flange adaptor to allow its removal if it is required to be maintained or replaced

PART 5 CIVIL ENGINEERING SPECIFICATION

Clause 5.2 - MATERIALS

Mortar – Clause 5.2.12.1 Table 5.3

- Cement: Sand (centre column) are to be 1: 2 to 2.5

Access Covers for Pumping Stations – Clause 5.2.42.1

- Covers shall be fabricated from mild steel, from stainless steel grade '316L', or from aluminium, minimum 4mm thick, and shall provide a non-slip surface
- All covers shall be set in a frame of the same material
- Frames are to have tangs or cleats for fixing into rebates.
- Covers and frames shall have a minimum design life against corrosion of 20 years in accordance with corrosivity category C4 of BS EN ISO 14713. Fabrication detailing shall eliminate crevice corrosion. Mild steel fabrications shall be galvanised to BS EN 1461 and have a mean coating thickness on each surface of 85 micron for steel thickness of 6mm or greater, or of 70 micron for steel thickness less than 6mm. A thicker coating may be required in more corrosive environments.

Clause 5.7 - CLEANSING & TESTING

Testing of Polyethylene Pressure Pipes – Clause 5.7.10.2

- Wessex Water require the "dual pressure – log recovery graph" test to WRc procedure